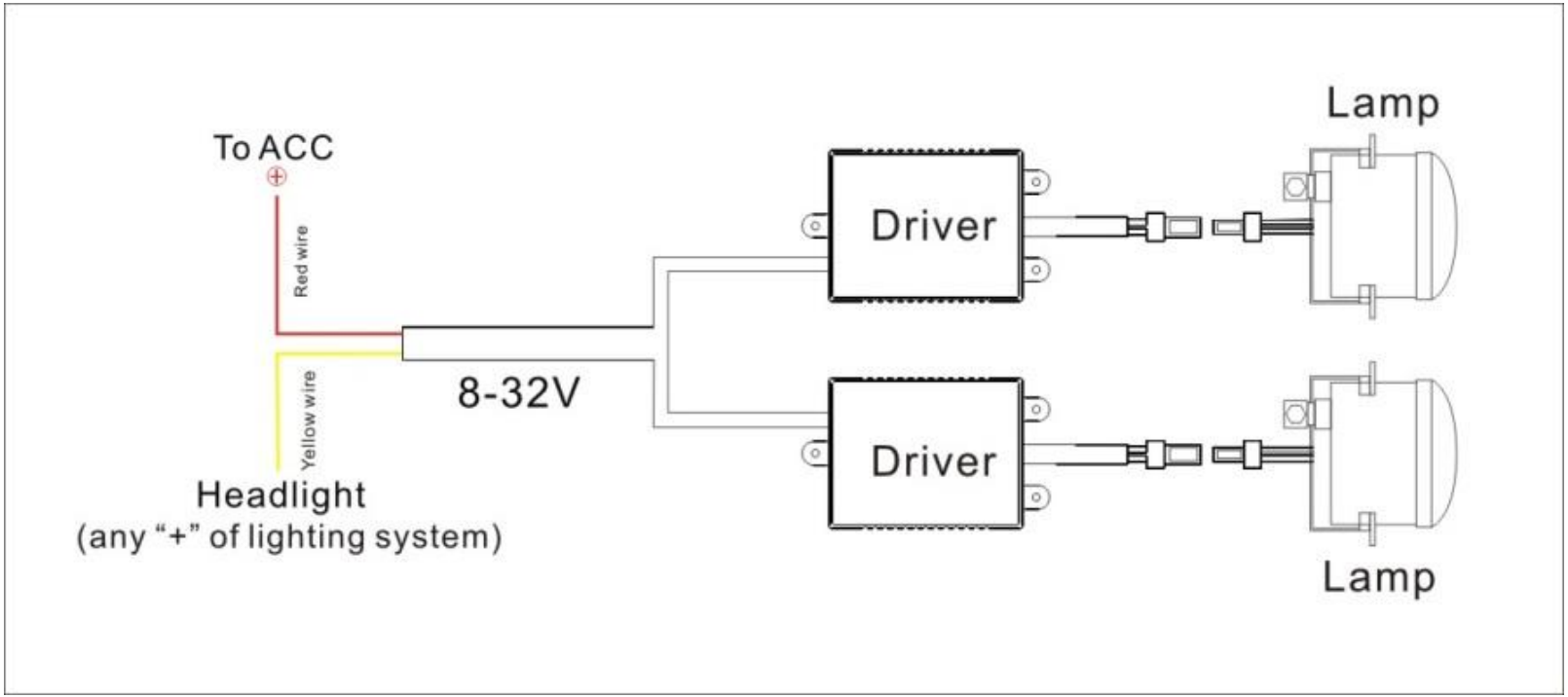
To ACC
Red wire
Yellow wire
8-32V
Headlight
(any "+" of lighting system)
Driver
Driver
Lamp
Lamp

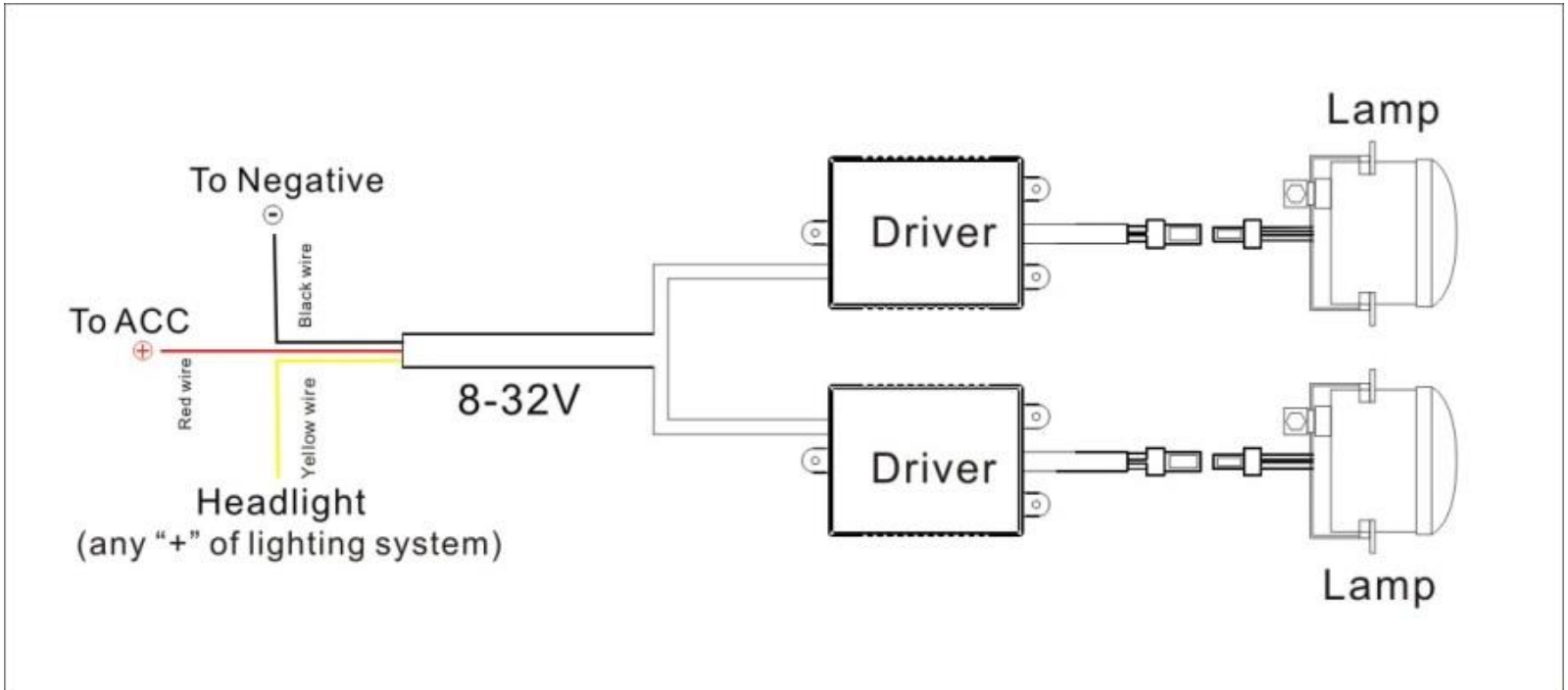
Lamp
To Negative
Driver
Black wire
To ACC
Red wire
Yellow wire
8-32V
Driver
Headlight
(any "+" of lighting system)
Lamp